Nebula

User Manual

Product Link: https://biqu.equipment/products/biqu-nebula

Wiki: https://bttwiki.com/Nebula.html

Introduction

Nebula, the smart extruder designed for optimal cost-effectiveness, features an RGB backlight to enhance your print head. It boasts powerful extrusion capabilities, a built-in filament sensor, and a customizable G-code button, enabling auto filament loading and one-button unloading.

Feature Highlights

RGB Lighting: Programmable for visual status monitoring.
Built-in Filament Sensor: Automatically triggers filament loading upon insertion.
Transparent Magnetic Cover: Enables efficient maintenance checks and repairs.
Customizable G-code Button: A programmable button for one-click filament unloading and other custom functions.
6kg+ Reliable Extrusion Force: Precision planetary gears deliver over 6kg of extrusion power, with a hardened steel drive gear ensuring consistent and flawless extrusion for perfect prints.

Specifications

Extrusion Method	Dual Gear Extrusion
Weight	143 g
Maximum Extrusion Force	6 kg (varies with filament types)
Klipper Rotation Distance	4.5
Recommended Motor Current	800 mA
Gear Ratio	11.25 :1
Drive Gear Circumference	50.4 mm
Filament Diameter and Tolerance	1.75 mm ± 0.05 mm
Voltage	24V

Dimensions

XYZ Dimensions: 52.73 x 36.5 x 54.82mm

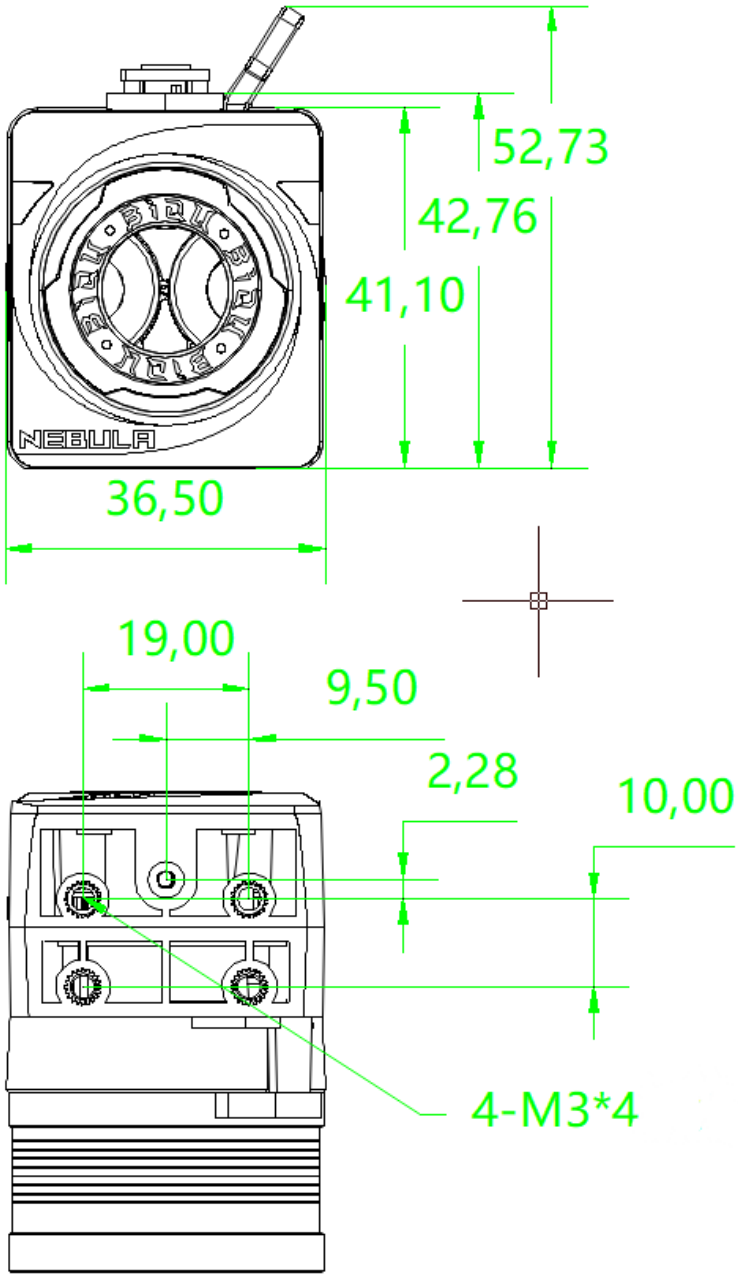

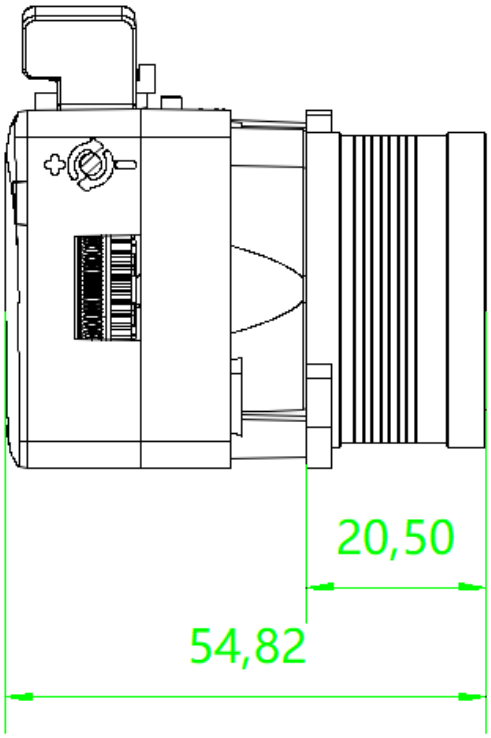

Adjusting the Drive Gear Clamp Distance

The drive gear clamp distance is adjustable to accommodate different types of filaments. Rotate the Limit Screw counterclockwise (toward the marked "(-)") to decrease distance or increase clamping pressure, which is ideal for hard filament, or clockwise (toward the marked "(+)") to increase distance to decrease pressure, ideal for softer materials.

Note: Avoid forcing the screw beyond its stopping point to prevent damage to the extruder.

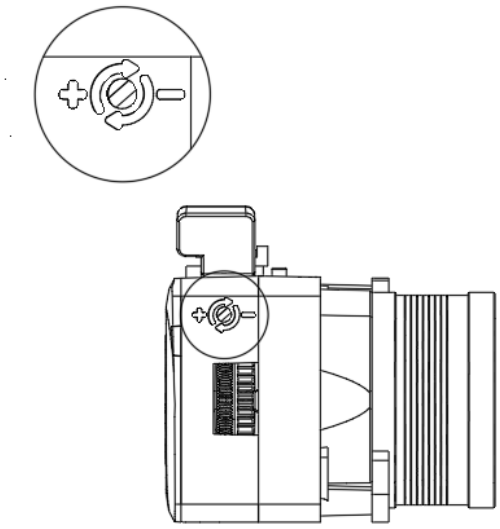

Programmable Button

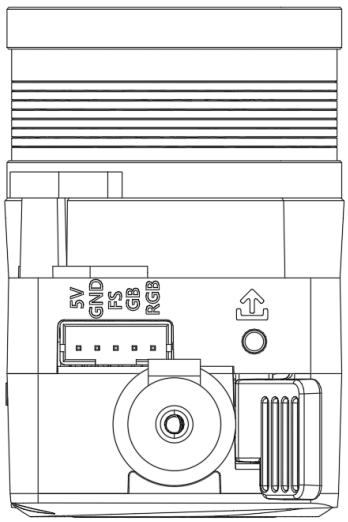	5V: 5V in GND: Ground FS: Extruder signal output — High level when no filament passes, low level when filament passes GB: Button signal output — High level when button is released, low level when button is pressed RGB: RGB light signal input — Allows color adjustment via signal input(For Details on Customized RGB lighting, refer to klipper-led_effect module developed by julianschill and Paul McGowan here:https://github.com/julianschill/klipper-led_effect/)

Motor Specifications

Number of Phase	2
Step Angle	1.8°
Rated Voltage	DC 2.4V
Rated Current	DC 1.0A
Holding Torque	≥110mN·m
Winding Resistant	2.4±10% ohm (20℃)
Winding Inductance	1.7±20% mH (1kHz)
Direction of Rotation	A-AB-B-CW
Rotor Inertia	15 g·cm²
Motor Weight	0.1 kg
Insulation Class	Class F

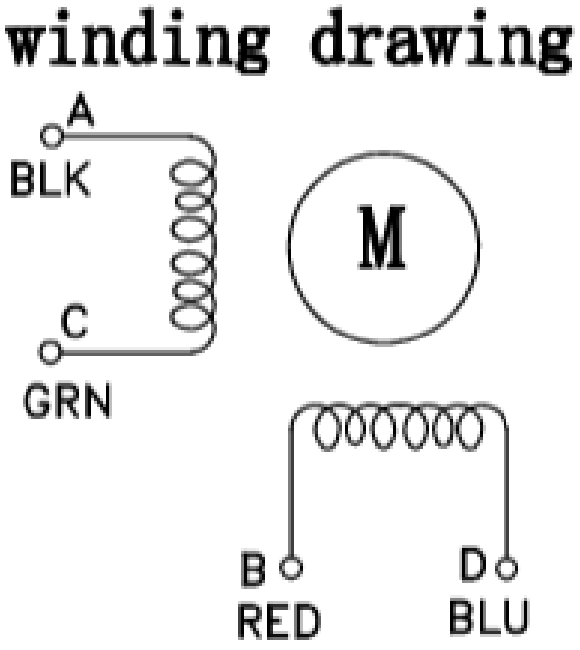

Expanded View

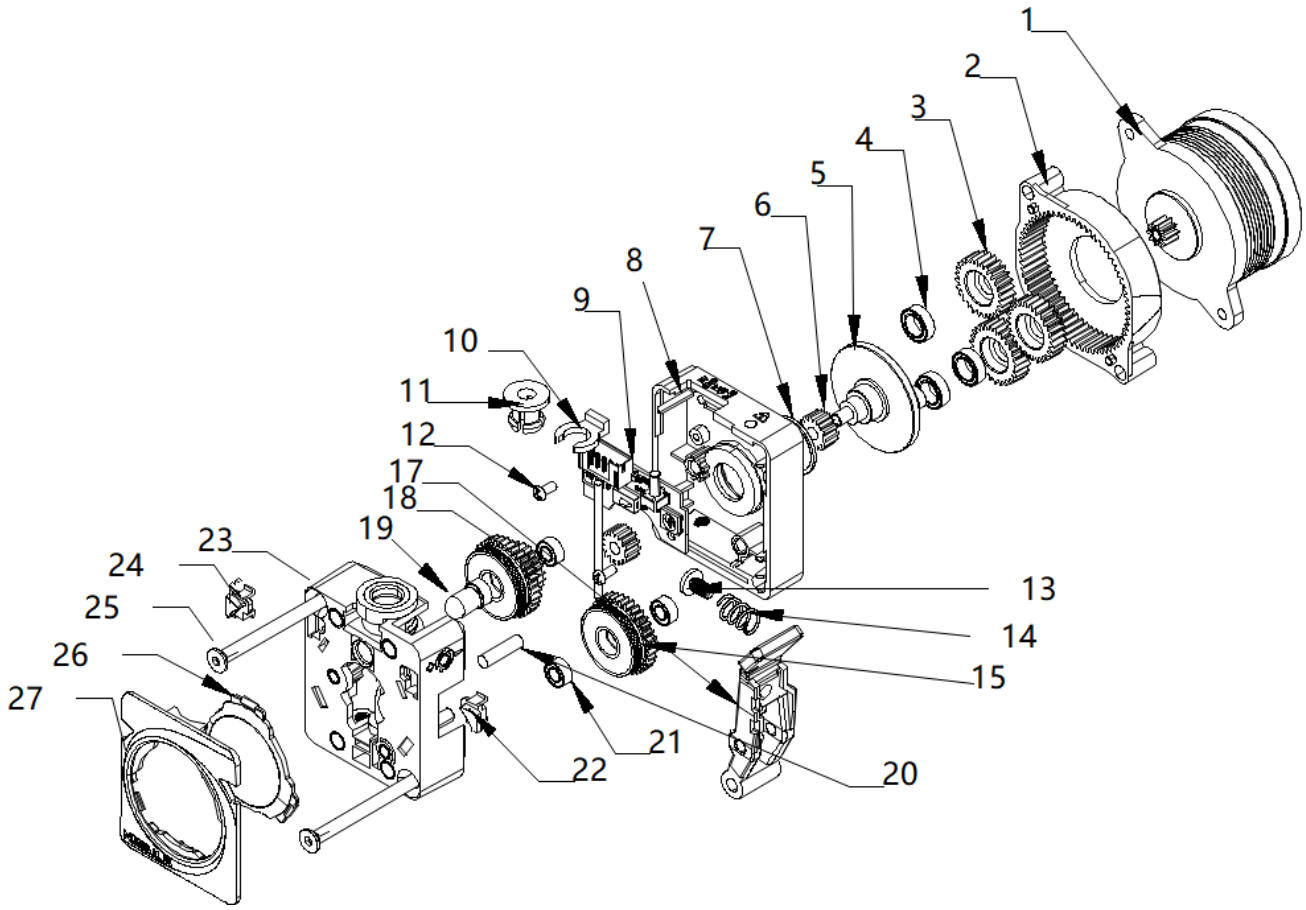

1. Motor
2. Ring Gear Housing
3. Planetary Gear
4. MR85ZZ Bearing
5. Planetary Gear Carrier
6. 14-Tooth Pinion Gear
7. MF128ZZ Bearing
8. Back Case
9. Distribution Board
10. Bowden Clip
15. Idler Gear
16. 3-5-6 PEEK Bearing
17. Idler Carrier Arm
18. Extrusion Gear
19. Filament Senser Insert
20. Pin (Diameter 3x11)
21. 3-5-10 PEEK Bearing
22. Right Lens
23. Front Case
24. Left Lens

11. Bowden Fitting
12. M2x4 Screw
13. Limit Screw
14. Spring
25. M3x25 FHCS Screw
26. Transparent Cover
27. Magnetic Cover Frame

Product Purchase Link

https://biqu.equipment/products/biqu-nebula

If you have any issues with the product, please submit a support ticket.

https://biqu3d.com/pages/submit-a-ticket

Navigation:

BIQU Official Website: http://biqu3d.com

BIGTREETECH Official Website: http://bigtree-tech.com

Online Store: https://biqu.equipment

Community: https://community.biqu3d.com